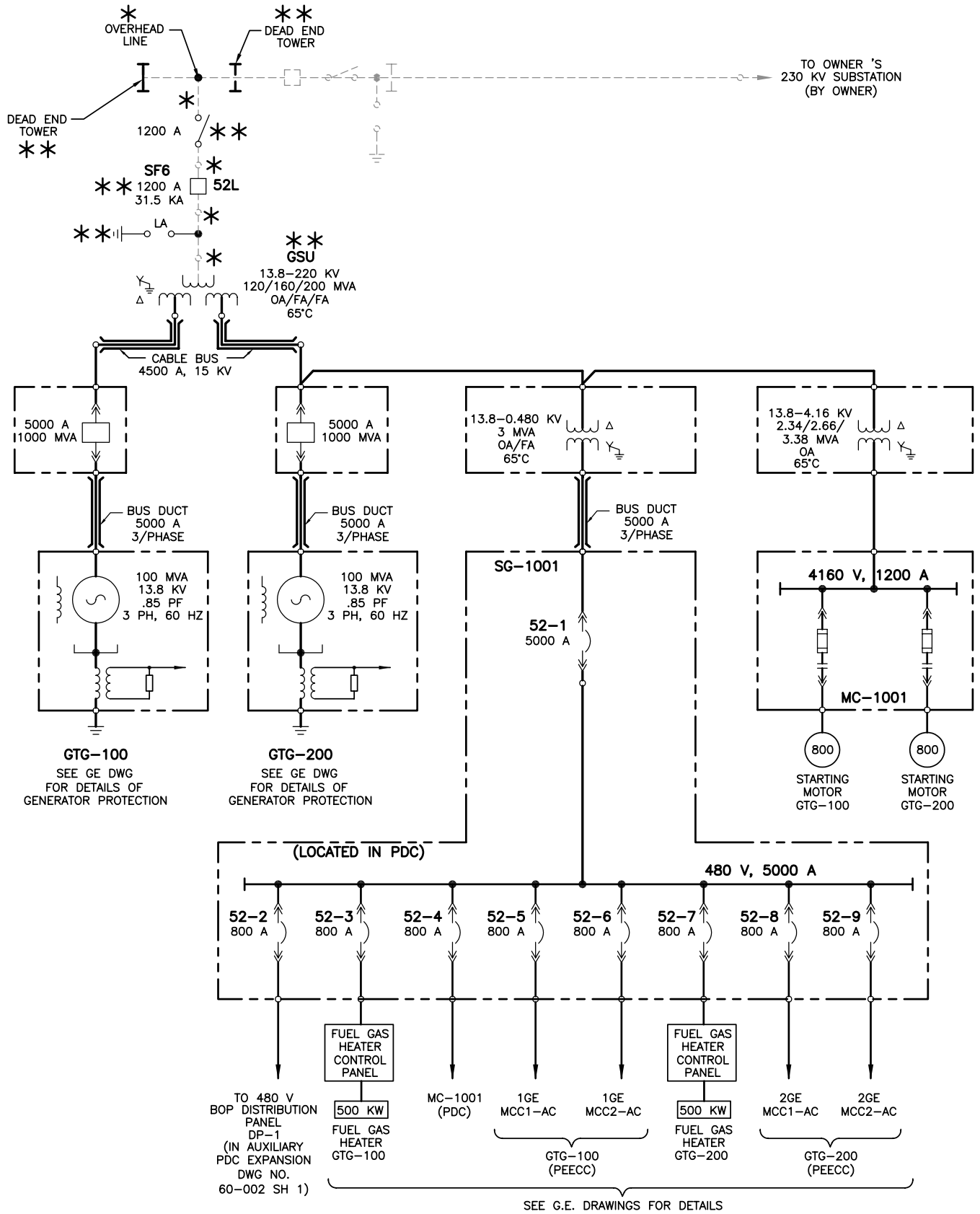

* – BY OWNER.

** – INSTALLED BY CONTRACTOR.

REVISED	CUSTOMER INFORMATION

© COPYRIGHT, 2008, ProEnergy SERVICES ALL RIGHTS, RESERVED. THIS DRAWING IS THE PROPRIETARY AND/OR CONFIDENTIAL PROPERTY OF ProEnergy SERVICES AND IS LOANED IN STRICT CONFIDENCE WITH THE UNDERSTANDING THAT IT WILL NOT BE REPRODUCED NOR USED FOR ANY PURPOSE EXCEPT THAT FOR WHICH IT IS LOANED. IT SHALL BE IMMEDIATELY RETURNED ON DEMAND, AND IS SUBJECT TO ALL OTHER TERMS AND CONDITIONS OF ANY WRITTEN AGREEMENT OR PURCHASE ORDER WHICH INCORPORATES OR RELATES TO THIS DRAWING.

NO.	DATE	BY	APP'D	DESCRIPTION

REVISIONS

DRAWN	SL	02/13/09
CHECK		
DESIGN		
PROJ ENGR		
PROJ MGR		
QA MGR		
SCALE	NONE	SIZE D

ProEnergy EPC SERVICES

10820 EAST 45TH STREET
SUITE 100
TULSA, OKLAHOMA 74146
OFFICE
FAX
www.proenergyservices.com

ProEnergy EPC Services, LLC

ONE LINE DIAGRAM
TWO (2) FRAME 7EA GENERATOR UNITS
EDELCA POWER PLANT

MARACAIBO VENEZUELA

JOB. NO.	DWG NO.	SH NO.	REV
T9005–A	60–001	1	A